Para 2010: State of the Art in Scientific and Parallel Computing
University of Iceland, Reykjavik, June 6–9 2010

Performance Evaluation of Core Numerical Algorithms: a Tool to Measure Instruction Level Parallelism

Bernard Goossens, Philippe Langlois, David Parello, Éric Petit

University of Perpignan Via Domitia, France
DALI Research Project

Context and motivation

Aim: Improve and validate the accuracy of numerical algorithms . . .
. . . without sacrificing the running-time performances

Floating point computation using IEEE-754 arithmetic

A classic problem: I want to double the accuracy of a computed result while running as fast as possible?

A classic answer:

Metric	Eval	AccEval1	AccEval2
Flop count	2n	$22n + 5$	$28n + 4$
Flop count ratio	1	≈ 11	≈ 14
Measured #cycles ratio	1	$2.8 - 3.2$	$8.7 - 9.7$

Flop counts and running-times are not proportional. Why? Which one trust?

Running-time measures: details

Average ratios for polynomials of degree 5 to 200

Working precision: IEEE-754 double precision

		$\frac{\text{CompHorner}}{\text{Horner}}$	$\frac{\text{DDHorner}}{\text{Horner}}$	$\frac{\text{DDHorner}}{\text{CompHorner}}$
Pentium 4, 3.00 GHz	GCC 4.1.2	2.8	8.5	3.0
(x87 fp unit)	ICC 9.1	2.7	9.0	3.4
(sse2 fp unit)	GCC 4.1.2	3.0	8.9	3.0
(sse2 fp unit)	ICC 9.1	3.2	9.7	3.4
Athlon 64, 2.00 GHz	GCC 4.1.2	3.2	8.7	3.0
Itanium 2, 1.4 GHz	GCC 4.1.1	2.9	7.0	2.4
	ICC 9.1	1.5	5.9	3.9

Results vary with a factor of 2

Life-period for the significance of these computing environments ?

How to trust non-reproducible experiment results?

Measures are mostly non-reproducible

- The execution time of a binary program varies, even using the same data input and the same execution environment.

Why? Experimental uncertainties

- spoiling events: background tasks, concurrent jobs, OS interrupts
- non deterministic issues: instruction scheduler, branch predictor
- external conditions: temperature of the room
- timing accuracy: no constant cycle period on modern processors (i7, . . .)

Uncertainty increases as computer system complexity does

- architecture issues: multicore, many/multicore, hybrid architectures
- compiler options and its effects

How to read the current literature?

Lack of proof, or at least of reproducibility

Measuring the computing time of summation algorithms in a high-level language on today's architectures is more of a hazard than scientific research. *S.M. Rump (SISC, 2009)*

The picture is blurred: the computing chain is wobbling around

If we combine all the published speedups (accelerations) on the well known public benchmarks since four decades, why don't we observe execution times approaching to zero? *S. Touati (2009)*

Two separate jobs:

write and prove the algorithm *vs.* profile and tune one of its implementation

We do not consider the source code (wrt the execution trace) since it's not clear we understand it enough for tuning the execution analysis.

M. Casas (Para 2010, last Sunday during the questions)

Outline

Highlight the potential of performance

General goals

- Understand the algorithm and architecture interaction
- Explain the set of measured running-times of its implementations
- Abstraction wrt the computing system for performance prediction and optimization
- Reproducible results in time and in location
- Automatic analysis

Our context

- Objects: accurate and core-level algorithms: XBLAS, polynomial evaluation
- Tasks: compare algorithms, improve the algorithm while designing it, chose algorithms $\rightarrow$ architecture, optimize algorithm $\rightarrow$ architecture

The PerPI Tool: principles

Abstract metric: Instruction Level Parallelism

- ILP: the potential of the instructions of a program that can be executed simultaneously
- #IPC for the Hennessy-Patterson ideal machine
- Compilers and processors exploits ILP: superscalar out-of-order execution
- Thin grain parallelism suitable for single node analysis (M. Gerndt, Monday)

What is ILP?

A synthetic sample: e = (a+b) + (c+d)

x86 binary

```
...
i1  mov    eax,DWP[ebp-16]
i2  mov    edx,DWP[ebp-20]
i3  add    edx,eax
i4  mov    ebx,DWP[ebp-8]
i5  add    ebx,DWP[ebp-12]
i6  add    edx,ebx
...
```

What is ILP?

A synthetic sample: e = (a+b) + (c+d)

x86 binary

```
...
i1  mov    eax,DWP[ebp-16]
i2  mov    edx,DWP[ebp-20]
i3  add    edx,eax
i4  mov    ebx,DWP[ebp-8]
i5  add    ebx,DWP[ebp-12]
i6  add    edx,ebx
...
```

Instruction and cycle counting

What is ILP?

A synthetic sample: e = (a+b) + (c+d)

x86 binary

```
...
i1  mov     eax,DWP[ebp-16]
i2  mov     edx,DWP[ebp-20]
i3  add     edx,eax
i4  mov     ebx,DWP[ebp-8]
i5  add     ebx,DWP[ebp-12]
i6  add     edx,ebx
...
```

Instruction and cycle counting

Cycle 0: i1 i2 i4

What is ILP?

A synthetic sample: e = (a+b) + (c+d)

x86 binary

```
...
i1  mov     eax,DWP[ebp-16]
i2  mov     edx,DWP[ebp-20]
i3  add     edx,eax
i4  mov     ebx,DWP[ebp-8]
i5  add     ebx,DWP[ebp-12]
i6  add     edx,ebx
...
```

Instruction and cycle counting

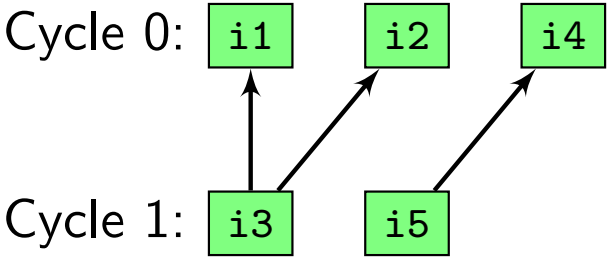

What is ILP?

A synthetic sample: e = (a+b) + (c+d)

x86 binary

	...
i1	mov eax,DWP[ebp-16]
i2	mov edx,DWP[ebp-20]
i3	add edx,eax
i4	mov ebx,DWP[ebp-8]
i5	add ebx,DWP[ebp-12]
i6	add edx,ebx
	...

Instruction and cycle counting

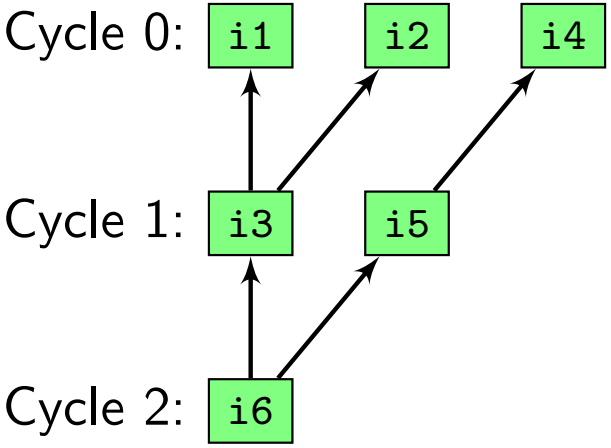

What is ILP?

A synthetic sample: e = (a+b) + (c+d)

x86 binary

	...
i1	mov eax,DWP[ebp-16]
i2	mov edx,DWP[ebp-20]
i3	add edx,eax
i4	mov ebx,DWP[ebp-8]
i5	add ebx,DWP[ebp-12]
i6	add edx,ebx
	...

Instruction and cycle counting

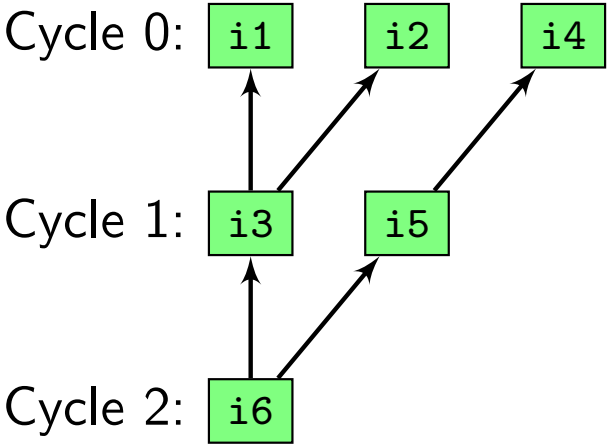

# of instructions = 6, # of cycles = 3

ILP = # of instructions/# of cycles = 2

ILP explains why compensated algorithms are fast

	AccEval	AccEval2
ILP:	≈ 11	1.65

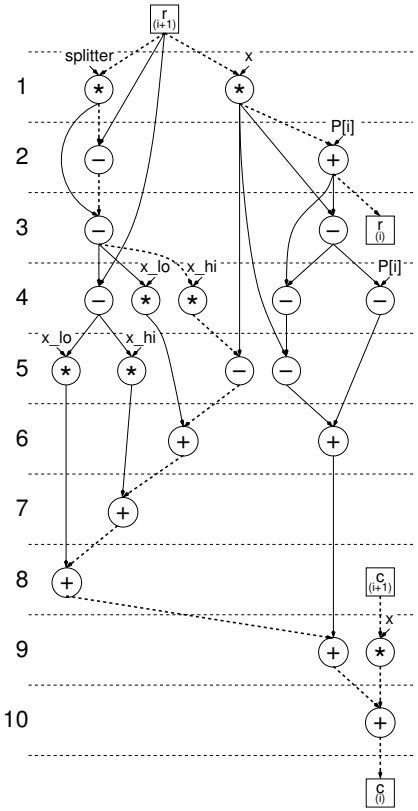

(a)

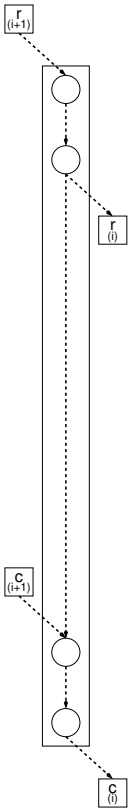

(b)

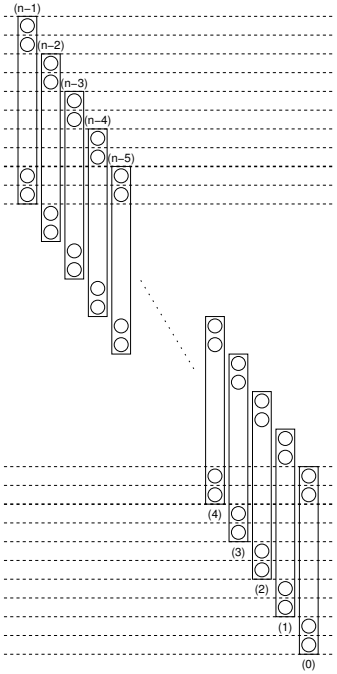

(c)

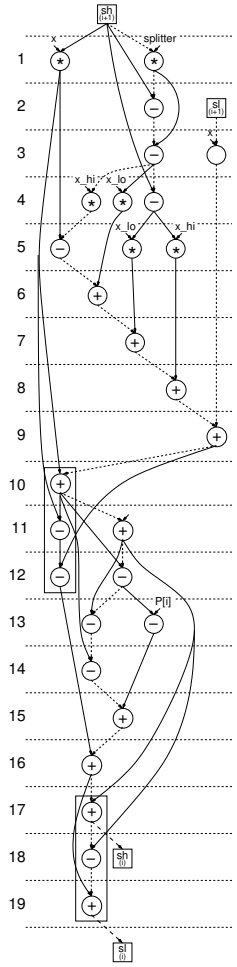

(a)

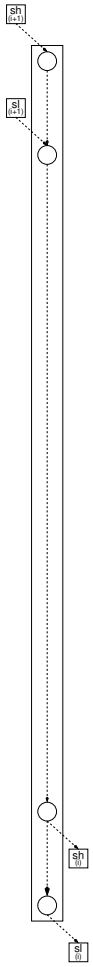

(b)

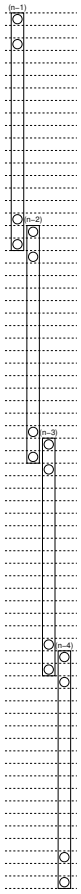

(c)

The PerPI Tool: principles

Abstract metric: Instruction Level Parallelism

- ILP: the potential of the instructions of a program that can be executed simultaneously
- #IPC for the Hennessy-Patterson ideal machine
- Compilers and processors exploits ILP: superscalar out-of-order execution
- Thin grain parallelism suitable for single node analysis (M. Gerndt, Monday)

From ILP analysis to the PerPI tool

- 2007: successful previous pencil-and-paper ILP analysis [PhL-Louvet,2007]
- 2008: prototype within a processor simulation platform (PPC asm)
- 2009: PerPI to analyse and visualise the ILP of x86-coded algorithms
  - Pintool (http://www.pintool.org)
  - Input: x86 binary file
  - Outputs: ILP measure, IPC histogram, data-dependency graph

What is PIN? Dynamic instrumentation

```
$> pin -t pintool -- ./a.out
```

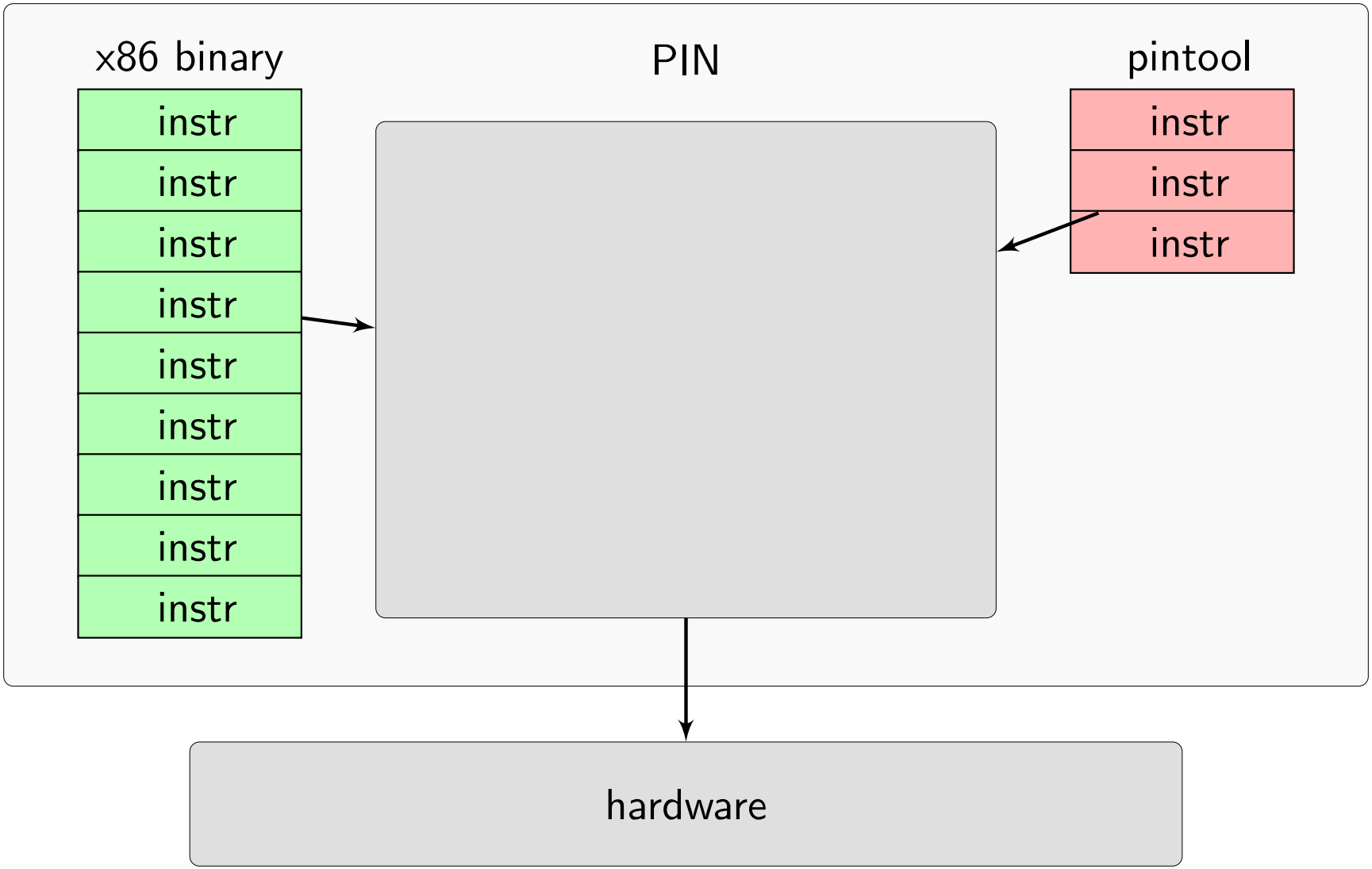

What is PIN? Dynamic instrumentation

```
$> pin -t pintool -- ./a.out
```

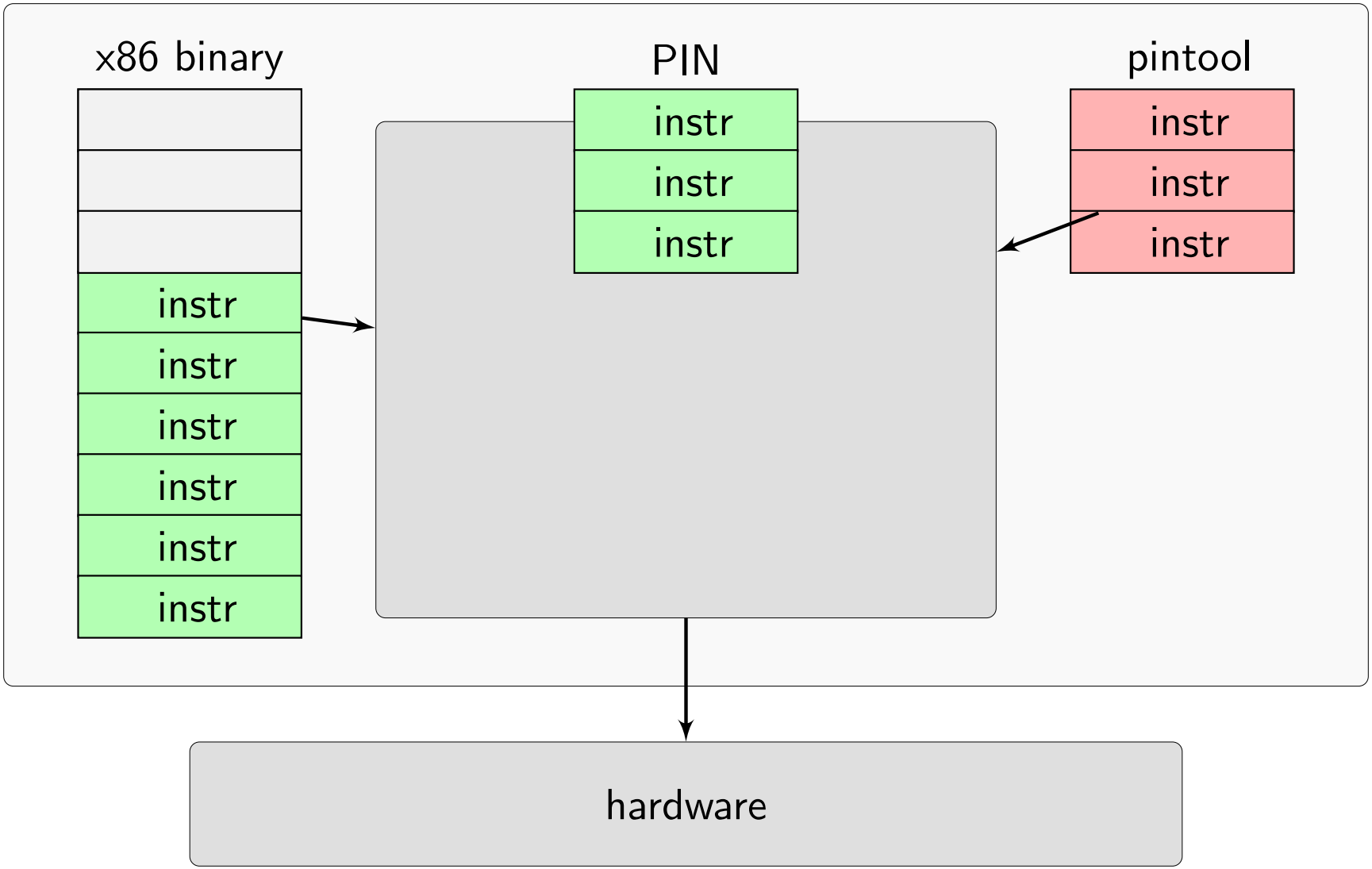

What is PIN? Dynamic instrumentation

```
$> pin -t pintool -- ./a.out
```

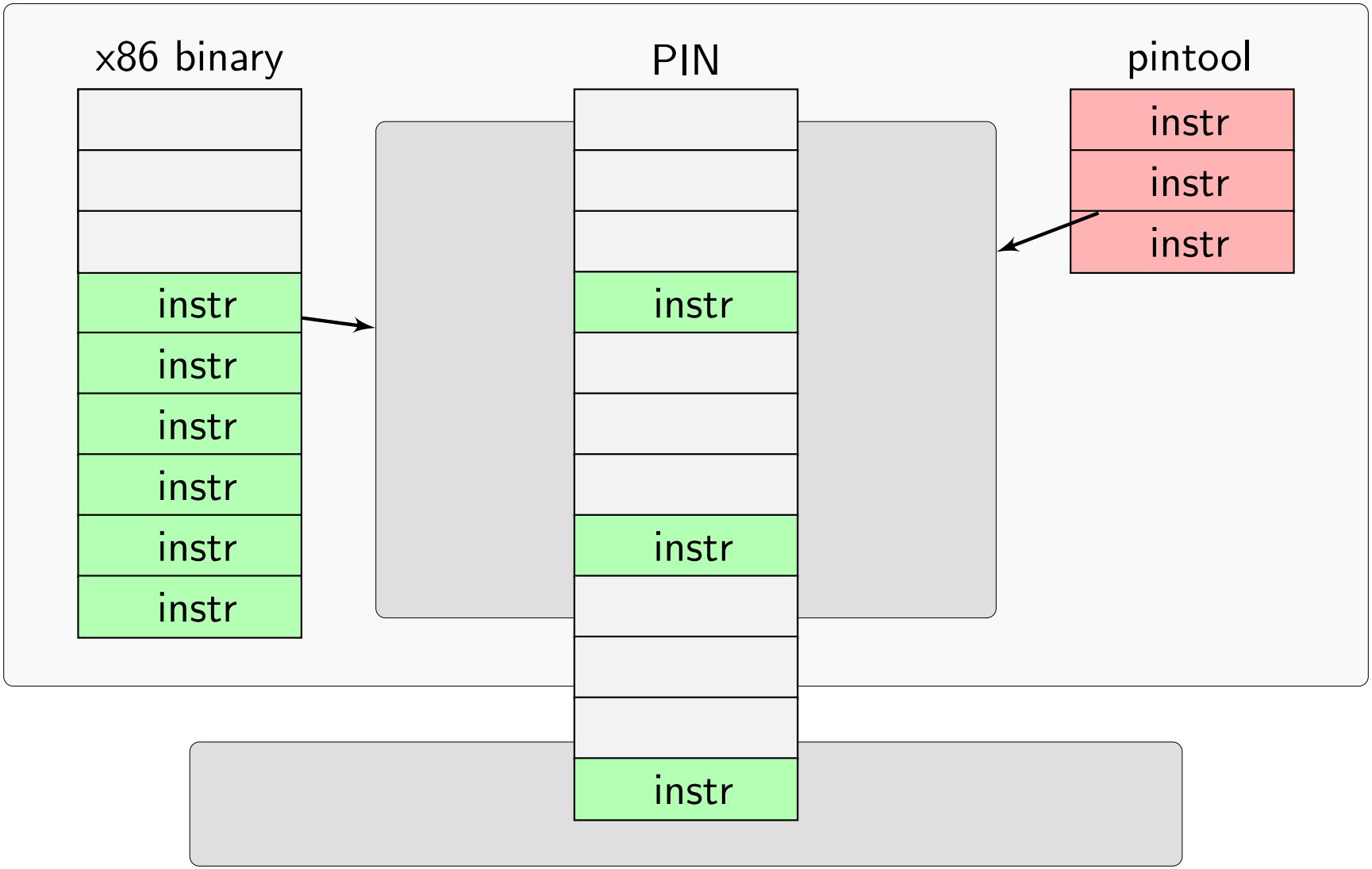

What is PIN? Dynamic instrumentation

```
$> pin -t pintool -- ./a.out
```

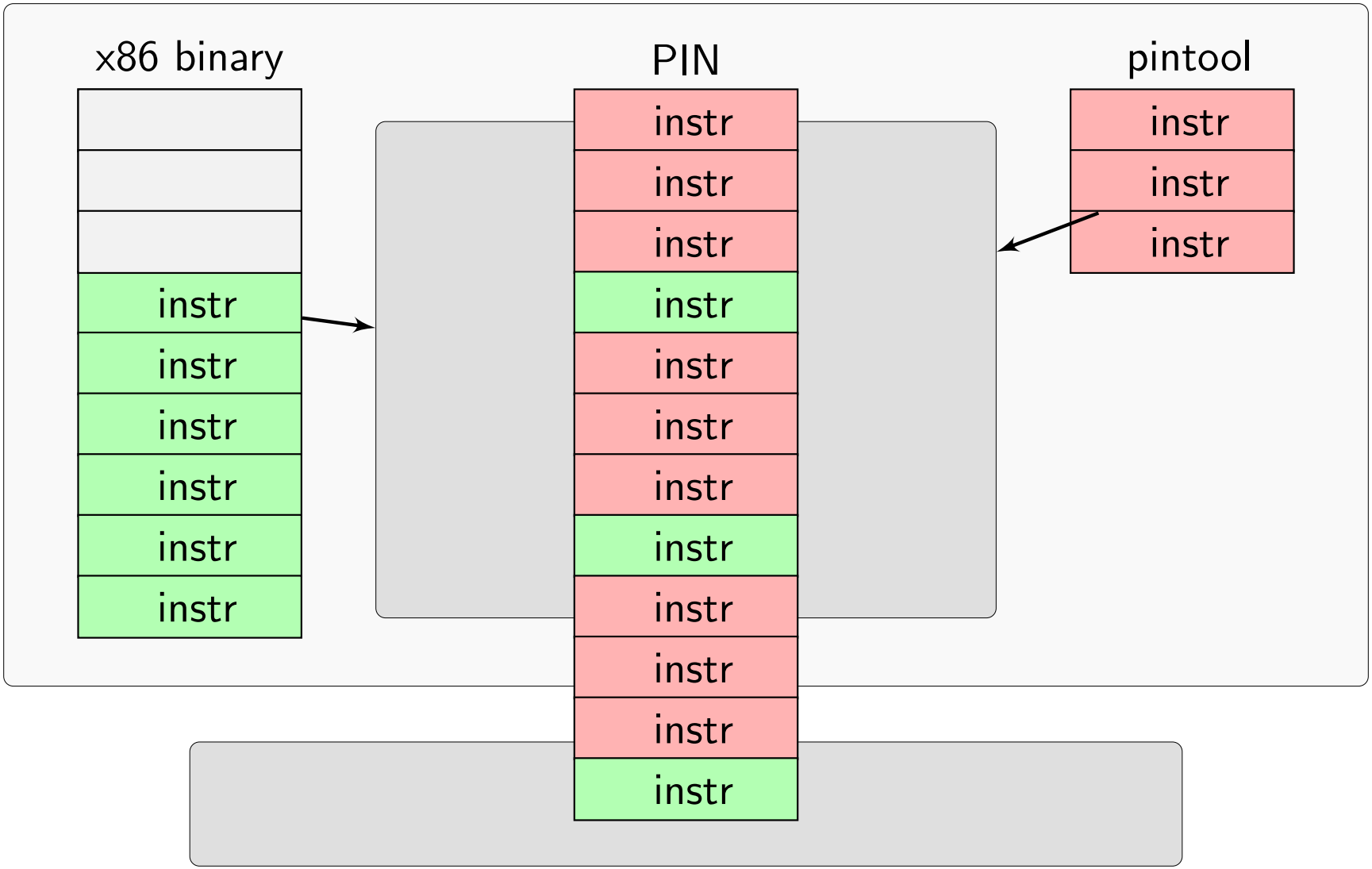

What is PIN? Dynamic instrumentation

```
$> pin -t pintool -- ./a.out
```

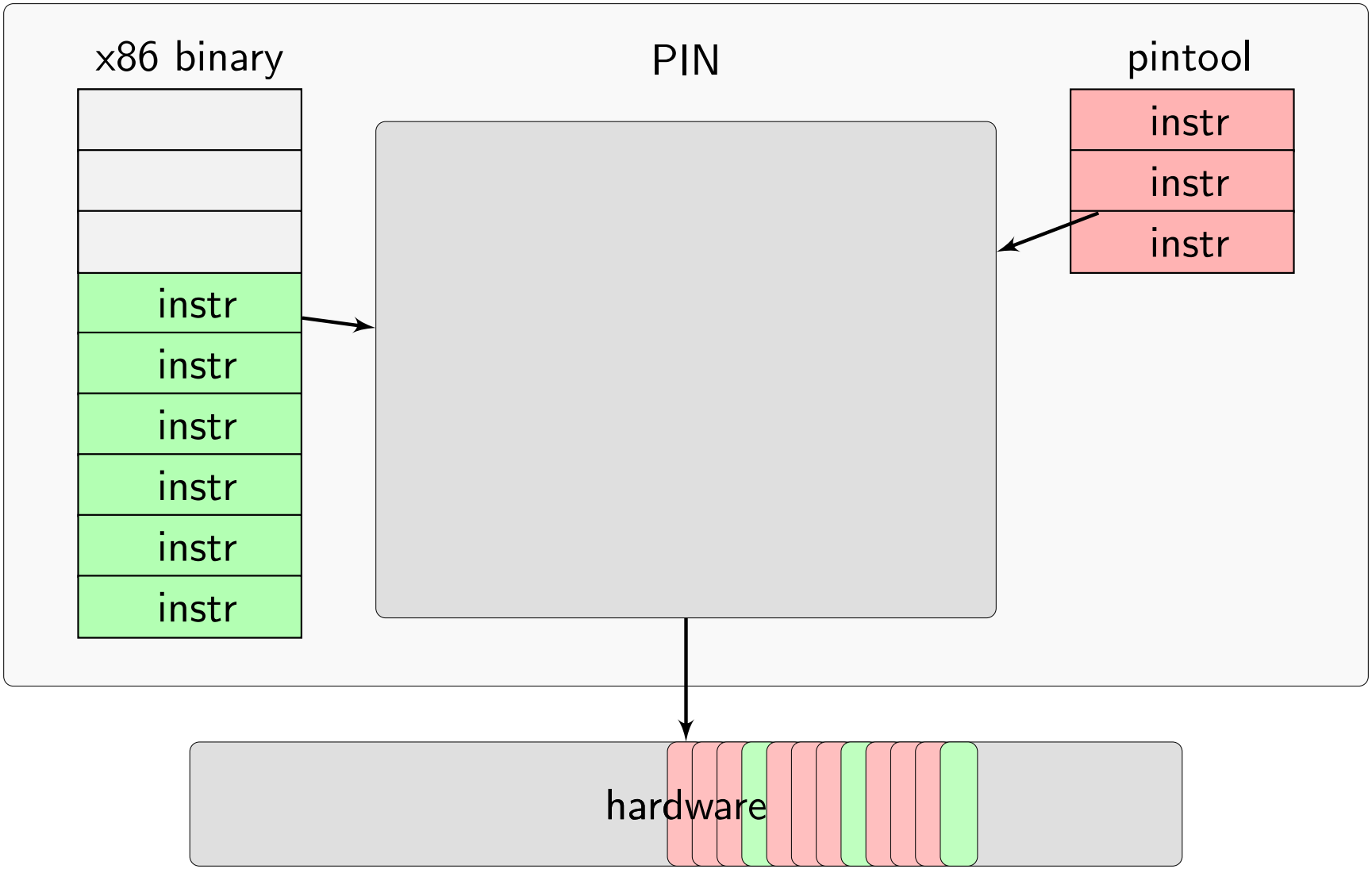

What is PIN? Dynamic instrumentation

```
$> pin -t pintool -- ./a.out
```

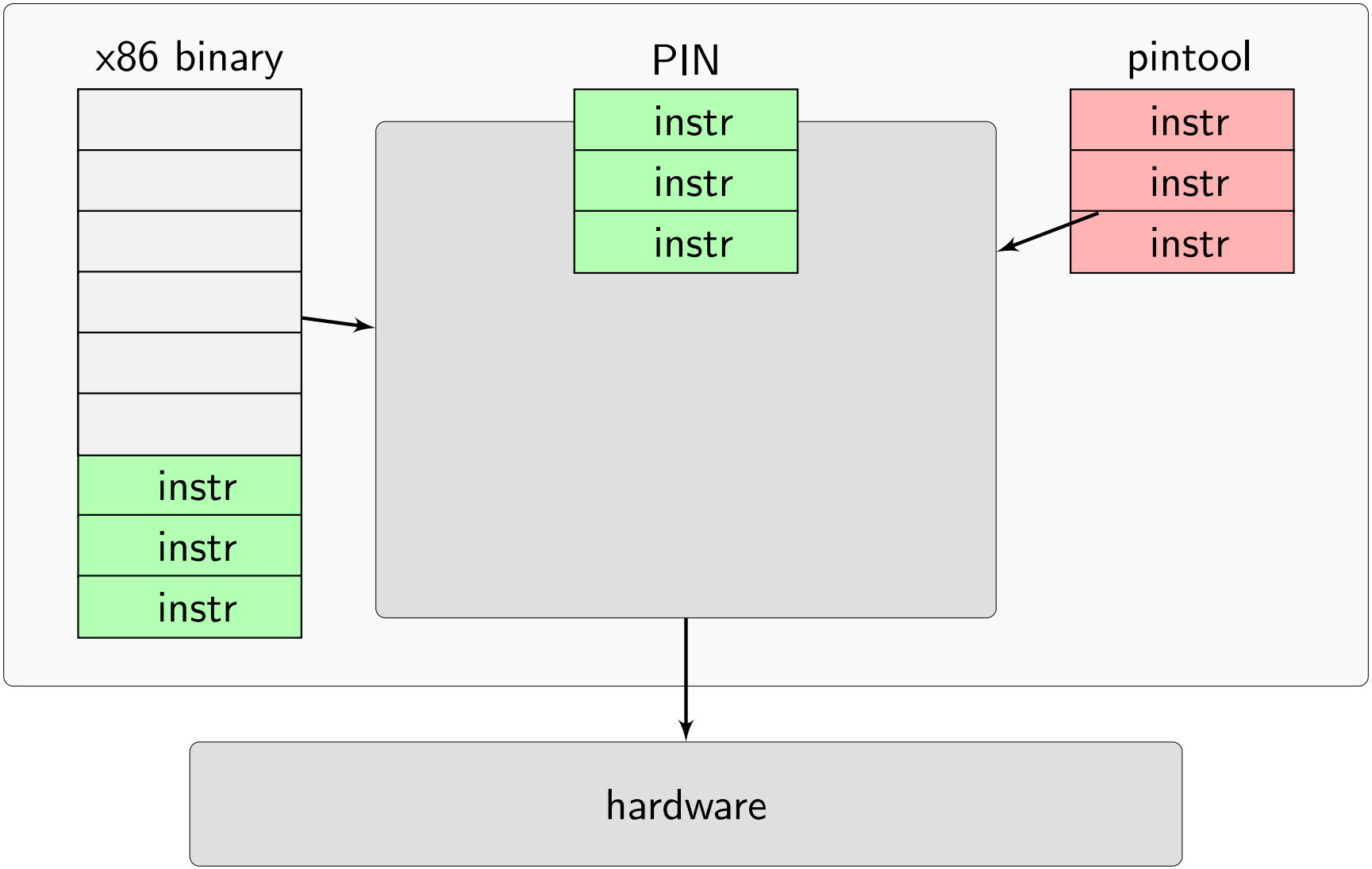

How to compute ILP?

A synthetic sample: e = (a+b) + (c+d)

x86 binary

```
    ...
i1  mov     eax,DWP[ebp-16]
i2  mov     edx,DWP[ebp-20]
i3  add     edx,eax
i4  mov     ebx,DWP[ebp-8]
i5  add     ebx,DWP[ebp-12]
i6  add     edx,ebx
    ...
```

How to compute ILP?

A synthetic sample: e = (a+b) + (c+d)

x86 binary

```
...
      call   analyse
i1    mov    eax,DWP[ebp-16]
      call   analyse
i2    mov    edx,DWP[ebp-20]
      call   analyse
i3    add    edx,eax
      call   analyse
i4    mov    ebx,DWP[ebp-8]
      call   analyse
i5    add    ebx,DWP[ebp-12]
      call   analyse
i6    add    edx,ebx
...
```

Analyse routine

How to compute ILP?

A synthetic sample: e = (a+b) + (c+d)

x86 binary

```
      ...
      call   analyse
i1    mov    eax,DWP[ebp-16]
      call   analyse
i2    mov    edx,DWP[ebp-20]
      call   analyse
i3    add    edx,eax
      call   analyse
i4    mov    ebx,DWP[ebp-8]
      call   analyse
i5    add    ebx,DWP[ebp-12]
      call   analyse
i6    add    edx,ebx
      ...
```

Analyse routine

ni = 0

nc = 0

RC (register cycles)

eax	:	0
ebx	:	0
ecx	:	0
edx	:	0
ebx	:	0
...	:	0
ebp	:	0
...	:	0

How to compute ILP?

A synthetic sample: e = (a+b) + (c+d)

x86 binary

```
...
call    analyse
i1  mov     eax,DWP[ebp-16]
call    analyse
i2  mov     edx,DWP[ebp-20]
call    analyse
i3  add     edx,eax
call    analyse
i4  mov     ebx,DWP[ebp-8]
call    analyse
i5  add     ebx,DWP[ebp-12]
call    analyse
i6  add     edx,ebx
...
```

Analyse routine

```
input(i1):  ebp
cycle(i1)=max(RC[ebp]) = 0
```

```
ni++; nc = max(nc, nc(i))
```

ni = 1

nc = 0

RC (register cycles)

eax	:	0
ebx	:	0
ecx	:	0
edx	:	0
ebx	:	0
...	:	0
ebp	:	0
...	:	0

How to compute ILP?

A synthetic sample: e = (a+b) + (c+d)

x86 binary

```
...
call    analyse
i1  mov     eax,DWP[ebp-16]
call    analyse
i2  mov     edx,DWP[ebp-20]
call    analyse
i3  add     edx,eax
call    analyse
i4  mov     ebx,DWP[ebp-8]
call    analyse
i5  add     ebx,DWP[ebp-12]
call    analyse
i6  add     edx,ebx
...
```

Analyse routine

```
input(i1):  ebp
cycle(i1)=max(RC[ebp]) = 0
output(i1):  eax
new cycle(eax)=cycle(i1)+1 = 1
```

RC (register cycles)

eax	:	1
ebx	:	0
ecx	:	0
edx	:	0
ebx	:	0
...	:	0
ebp	:	0
...	:	0

ni = 1

nc = 0

How to compute ILP?

A synthetic sample: e = (a+b) + (c+d)

x86 binary

```
    ...
    call    analyse
i1  mov     eax,DWP[ebp-16]
    call    analyse
i2  mov     edx,DWP[ebp-20]
    call    analyse
i3  add     edx,eax
    call    analyse
i4  mov     ebx,DWP[ebp-8]
    call    analyse
i5  add     ebx,DWP[ebp-12]
    call    analyse
i6  add     edx,ebx
    ...
```

Analyse routine

ni = 1

nc = 0

RC (register cycles)

eax	:	1
ebx	:	0
ecx	:	0
edx	:	0
ebx	:	0
...	:	0
ebp	:	0
...	:	0

How to compute ILP?

A synthetic sample: e = (a+b) + (c+d)

x86 binary

```
...
      call    analyse
i1    mov     eax,DWP[ebp-16]
      call    analyse
i2    mov     edx,DWP[ebp-20]
      call    analyse
i3    add     edx,eax
      call    analyse
i4    mov     ebx,DWP[ebp-8]
      call    analyse
i5    add     ebx,DWP[ebp-12]
      call    analyse
i6    add     edx,ebx
...
```

Analyse routine

```
input(i2):  ebp
cycle(i2)=max(RC[ebp]) = 0
```

```
ni++; nc = max(nc, nc(i))
```

ni = 2

nc = 0

RC (register cycles)

eax	:	1
ebx	:	0
ecx	:	0
edx	:	0
ebx	:	0
...	:	0
ebp	:	0
...	:	0

How to compute ILP?

A synthetic sample: e = (a+b) + (c+d)

x86 binary

```
...
call    analyse
i1  mov     eax,DWP[ebp-16]
call    analyse
i2  mov     edx,DWP[ebp-20]
call    analyse
i3  add     edx,eax
call    analyse
i4  mov     ebx,DWP[ebp-8]
call    analyse
i5  add     ebx,DWP[ebp-12]
call    analyse
i6  add     edx,ebx
...
```

Analyse routine

```
input(i2):   ebp
cycle(i2)=max(RC[ebp]) = 0
output(i2):   edx
new cycle(edx)=cycle(i2)+1 = 1
```

RC (register cycles)

eax	:	1
ebx	:	0
ecx	:	0
edx	:	1
ebx	:	0
...	:	0
ebp	:	0
...	:	0

ni = 2

nc = 0

How to compute ILP?

A synthetic sample: e = (a+b) + (c+d)

x86 binary

```
    ...
    call    analyse
i1  mov     eax,DWP[ebp-16]
    call    analyse
i2  mov     edx,DWP[ebp-20]
    call    analyse
i3  add     edx,eax
    call    analyse
i4  mov     ebx,DWP[ebp-8]
    call    analyse
i5  add     ebx,DWP[ebp-12]
    call    analyse
i6  add     edx,ebx
    ...
```

Analyse routine

ni = 2

nc = 0

RC (register cycles)

eax	:	1
ebx	:	0
ecx	:	0
edx	:	1
ebx	:	0
...	:	0
ebp	:	0
...	:	0

How to compute ILP?

A synthetic sample: e = (a+b) + (c+d)

x86 binary

```
      ...
      call    analyse
i1    mov     eax,DWP[ebp-16]
      call    analyse
i2    mov     edx,DWP[ebp-20]
      call    analyse
i3    add     edx,eax
      call    analyse
i4    mov     ebx,DWP[ebp-8]
      call    analyse
i5    add     ebx,DWP[ebp-12]
      call    analyse
i6    add     edx,ebx
      ...
```

Analyse routine

```
input(i3):  edx, eax
cycle(i3)=max(RC[edx],RC[eax]) = 1
```

```
ni++; nc = max(nc, nc(i))
```

ni = 3

nc = 1

RC (register cycles)

eax	:	1
ebx	:	0
ecx	:	0
edx	:	1
ebx	:	0
...	:	0
ebp	:	0
...	:	0

How to compute ILP?

A synthetic sample: e = (a+b) + (c+d)

x86 binary

```
...
call    analyse
i1  mov     eax,DWP[ebp-16]
call    analyse
i2  mov     edx,DWP[ebp-20]
call    analyse
i3  add     edx,eax
call    analyse
i4  mov     ebx,DWP[ebp-8]
call    analyse
i5  add     ebx,DWP[ebp-12]
call    analyse
i6  add     edx,ebx
...
```

Analyse routine

```
input(i3):  edx, eax
cycle(i3)=max(RC[edx],RC[eax]) = 1
output(i3):  edx
new cycle(edx)=cycle(i3)+1 = 2
```

ni = 3

nc = 1

RC (register cycles)

eax	:	1
ebx	:	0
ecx	:	0
edx	:	2
ebx	:	0
...	:	0
ebp	:	0
...	:	0

How to compute ILP?

A synthetic sample: e = (a+b) + (c+d)

x86 binary

```
    ...
    call   analyse
i1  mov    eax,DWP[ebp-16]
    call   analyse
i2  mov    edx,DWP[ebp-20]
    call   analyse
i3  add    edx,eax
    call   analyse
i4  mov    ebx,DWP[ebp-8]
    call   analyse
i5  add    ebx,DWP[ebp-12]
    call   analyse
i6  add    edx,ebx
    ...
```

Analyse routine

ni = 3

nc = 1

RC (register cycles)

eax	:	1
ebx	:	0
ecx	:	0
edx	:	2
ebx	:	0
...	:	0
ebp	:	0
...	:	0

How to compute ILP?

A synthetic sample: e = (a+b) + (c+d)

x86 binary

```
...
call    analyse
i1  mov     eax,DWP[ebp-16]
call    analyse
i2  mov     edx,DWP[ebp-20]
call    analyse
i3  add     edx,eax
call    analyse
i4  mov     ebx,DWP[ebp-8]
call    analyse
i5  add     ebx,DWP[ebp-12]
call    analyse
i6  add     edx,ebx
...
```

Analyse routine

```
input(i4):  ebp
cycle(i4)=max(RC[ebp]) = 0
```

```
ni++; nc = max(nc, nc(i))
```

ni = 4

nc = 1

RC (register cycles)

eax	:	1
ebx	:	0
ecx	:	0
edx	:	2
ebx	:	0
...	:	0
ebp	:	0
...	:	0

How to compute ILP?

A synthetic sample: e = (a+b) + (c+d)

x86 binary

```
...
call    analyse
i1  mov     eax,DWP[ebp-16]
call    analyse
i2  mov     edx,DWP[ebp-20]
call    analyse
i3  add     edx,eax
call    analyse
i4  mov     ebx,DWP[ebp-8]
call    analyse
i5  add     ebx,DWP[ebp-12]
call    analyse
i6  add     edx,ebx
...
```

Analyse routine

```
input(i4):  ebp
cycle(i4)=max(RC[ebp]) = 0
output(i4):  ebx
new cycle(ebx)=cycle(i4)+1 = 1
```

ni = 4

nc = 1

RC (register cycles)

eax	:	1
ebx	:	1
ecx	:	0
edx	:	2
ebx	:	0
...	:	0
ebp	:	0
...	:	0

How to compute ILP?

A synthetic sample: e = (a+b) + (c+d)

x86 binary

```
    ...
    call    analyse
i1  mov     eax,DWP[ebp-16]
    call    analyse
i2  mov     edx,DWP[ebp-20]
    call    analyse
i3  add     edx,eax
    call    analyse
i4  mov     ebx,DWP[ebp-8]
    call    analyse
i5  add     ebx,DWP[ebp-12]
    call    analyse
i6  add     edx,ebx
    ...
```

Analyse routine

ni = 4

nc = 1

RC (register cycles)

eax	:	1
ebx	:	1
ecx	:	0
edx	:	2
ebx	:	0
...	:	0
ebp	:	0
...	:	0

How to compute ILP?

A synthetic sample: e = (a+b) + (c+d)

x86 binary

```
...
call    analyse
i1  mov     eax,DWP[ebp-16]
call    analyse
i2  mov     edx,DWP[ebp-20]
call    analyse
i3  add     edx,eax
call    analyse
i4  mov     ebx,DWP[ebp-8]
call    analyse
i5  add     ebx,DWP[ebp-12]
call    analyse
i6  add     edx,ebx
...
```

Analyse routine

```
input(i5):  ebx, ebp
cycle(i5)=max(RC[ebx],RC[ebp]) = 1
```

```
ni++; nc = max(nc, nc(i))
```

ni = 5

nc = 2

RC (register cycles)

eax	:	1
ebx	:	1
ecx	:	0
edx	:	2
ebx	:	0
...	:	0
ebp	:	0
...	:	0

How to compute ILP?

A synthetic sample: e = (a+b) + (c+d)

x86 binary

```
...
call    analyse
i1  mov     eax,DWP[ebp-16]
call    analyse
i2  mov     edx,DWP[ebp-20]
call    analyse
i3  add     edx,eax
call    analyse
i4  mov     ebx,DWP[ebp-8]
call    analyse
i5  add     ebx,DWP[ebp-12]
call    analyse
i6  add     edx,ebx
...
```

Analyse routine

```
input(i5):  ebx, ebp
cycle(i5)=max(RC[ebx],RC[ebp]) = 1
output(i5):  ebx
new cycle(ebx)=cycle(i5)+1 = 2
```

ni = 5

nc = 2

RC (register cycles)

eax	:	1
ebx	:	2
ecx	:	0
edx	:	2
ebx	:	0
...	:	0
ebp	:	0
...	:	0

How to compute ILP?

A synthetic sample: e = (a+b) + (c+d)

x86 binary

```
    ...
    call   analyse
i1  mov    eax,DWP[ebp-16]
    call   analyse
i2  mov    edx,DWP[ebp-20]
    call   analyse
i3  add    edx,eax
    call   analyse
i4  mov    ebx,DWP[ebp-8]
    call   analyse
i5  add    ebx,DWP[ebp-12]
    call   analyse
i6  add    edx,ebx
    ...
```

Analyse routine

ni = 5

nc = 2

RC (register cycles)

eax	:	1
ebx	:	2
ecx	:	0
edx	:	2
ebx	:	0
...	:	0
ebp	:	0
...	:	0

How to compute ILP?

A synthetic sample: e = (a+b) + (c+d)

x86 binary

```
...
call    analyse
i1  mov     eax,DWP[ebp-16]
call    analyse
i2  mov     edx,DWP[ebp-20]
call    analyse
i3  add     edx,eax
call    analyse
i4  mov     ebx,DWP[ebp-8]
call    analyse
i5  add     ebx,DWP[ebp-12]
call    analyse
i6  add     edx,ebx
...
```

Analyse routine

```
input(i6):  edx, ebx
cycle(i6)=max(RC[edx],RC[ebx]) = 2
```

```
ni++; nc = max(nc, nc(i))
```

ni = 6

nc = 2

RC (register cycles)

eax	:	1
ebx	:	2
ecx	:	0
edx	:	2
ebx	:	0
...	:	0
ebp	:	0
...	:	0

How to compute ILP?

A synthetic sample: e = (a+b) + (c+d)

x86 binary

```
...
call    analyse
i1  mov     eax,DWP[ebp-16]
call    analyse
i2  mov     edx,DWP[ebp-20]
call    analyse
i3  add     edx,eax
call    analyse
i4  mov     ebx,DWP[ebp-8]
call    analyse
i5  add     ebx,DWP[ebp-12]
call    analyse
i6  add     edx,ebx
...
```

Analyse routine

```
input(i6):  edx, ebx
cycle(i6)=max(RC[edx],RC[ebx]) = 2
output(i6):  edx
new cycle(edx)=cycle(i6)+1 = 3
```

ni = 6

nc = 2

RC (register cycles)

eax	:	1
edx	:	3
ecx	:	0
edx	:	2
ebx	:	0
...	:	0
ebp	:	0
...	:	0

How to compute ILP?

A synthetic sample: e = (a+b) + (c+d)

x86 binary

```
    ...
    call   analyse
i1  mov    eax,DWP[ebp-16]
    call   analyse
i2  mov    edx,DWP[ebp-20]
    call   analyse
i3  add    edx,eax
    call   analyse
i4  mov    ebx,DWP[ebp-8]
    call   analyse
i5  add    ebx,DWP[ebp-12]
    call   analyse
i6  add    edx,ebx
    ...
```

Analyse routine

ni = 6

nc = 2

RC (register cycles)

eax	:	1
edx	:	3
ecx	:	0
edx	:	2
ebx	:	0
...	:	0
ebp	:	0
...	:	0

How to compute ILP?

A synthetic sample: e = (a+b) + (c+d)

x86 binary

```
      ...
      call   analyse
i1    mov    eax,DWP[ebp-16]
      call   analyse
i2    mov    edx,DWP[ebp-20]
      call   analyse
i3    add    edx,eax
      call   analyse
i4    mov    ebx,DWP[ebp-8]
      call   analyse
i5    add    ebx,DWP[ebp-12]
      call   analyse
i6    add    edx,ebx
      ...
```

Analyse routine

ni = 6

nc = 2

ILP = 6/3 = 2

RC (register cycles)

eax	:	1
edx	:	3
ecx	:	0
edx	:	2
ebx	:	0
...	:	0
ebp	:	0
...	:	0

Outline

Simulation produces reproducible results

```
start : _start
     start : .plt
          start : __libc_csu_init
               start : _init
                    start : call_gmon_start
                    stop : call_gmon_start::I[13]::C[9]::ILP[1.44444]
                    start : frame_dummy
                    stop : frame_dummy::I[7]::C[3]::ILP[2.33333]
                    start : __do_global_ctors_aux
                    stop : __do_global_ctors_aux::I[11]::C[6]::ILP[1.83333]
               stop : _init::I[41]::C[26]::ILP[1.57692]
          stop : __libc_csu_init::I[63]::C[39]::ILP[1.61538]
          start : main
               start : .plt
                    start : .plt
                         start : Horner
                         stop : Horner::I[5015]::C[2005]::ILP[2.50125]
                         start : Horner
                         stop : Horner::I[5015]::C[2005]::ILP[2.50125]
                         start : Horner
                         stop : Horner::I[5015]::C[2005]::ILP[2.50125]
                    stop : main::I[20129]::C[7012]::ILP[2.87065]
                    start : _fini
                         start : __do_global_dtors_aux
                         stop : __do_global_dtors_aux::I[11]::C[4]::ILP[2.75]
                    stop : _fini::I[23]::C[13]::ILP[1.76923]

Global ILP ::I[20236]::C[7065]::ILP[2.86426]
```

Profile results to compare two algorithms

```
start :          _start   (depth: 1 rtn_s_d: 0)
          start : __libc_csu_init   (depth: 2 rtn_s_d: 0)
               start :           _init   (depth: 3 rtn_s_d: 0)
                    start : call_gmon_start   (depth: 4 rtn_s_d: 0)
                    stop  : call_gmon_start   (depth: 4 rtn_s_d: 0)   I[13]::C[9]::ILP[1.44444]
                    start :     frame_dummy   (depth: 4 rtn_s_d: 0)
                    stop  :     frame_dummy   (depth: 4 rtn_s_d: 0)   I[7]::C[3]::ILP[2.33333]
                    start : __do_global_ctors_aux   (depth: 4 rtn_s_d: 0)
                    stop  : __do_global_ctors_aux   (depth: 4 rtn_s_d: 0)   I[11]::C[6]::ILP[1.8
               stop  :           _init   (depth: 3 rtn_s_d: 0)   I[41]::C[26]::ILP[1.57692]
          stop  : __libc_csu_init   (depth: 2 rtn_s_d: 0)   I[63]::C[39]::ILP[1.61538]
          start :            main   (depth: 2 rtn_s_d: 0)
               start :          Horner   (depth: 3 rtn_s_d: 0)
               stop  :          Horner   (depth: 3 rtn_s_d: 0)   I[519]::C[206]::ILP[2.51942]
               start :      CompHorner   (depth: 3 rtn_s_d: 0)
               stop  :      CompHorner   (depth: 3 rtn_s_d: 0)   I[3732]::C[318]::ILP[11.7358]
               start :        DDHorner   (depth: 3 rtn_s_d: 0)
               stop  :        DDHorner   (depth: 3 rtn_s_d: 0)   I[4229]::C[2106]::ILP[2.00807]
          stop  :            main   (depth: 2 rtn_s_d: 0)   I[9062]::C[2509]::ILP[3.6118]
          start :           _fini   (depth: 2 rtn_s_d: 0)
               start : __do_global_dtors_aux   (depth: 3 rtn_s_d: 0)
               stop  : __do_global_dtors_aux   (depth: 3 rtn_s_d: 0)   I[11]::C[4]::ILP[2.75]
          stop  :           _fini   (depth: 2 rtn_s_d: 0)   I[23]::C[13]::ILP[1.76923]

Global ILP    I[9169]::C[2562]::ILP[3.57884]
```

Histograms to compare two algorithms

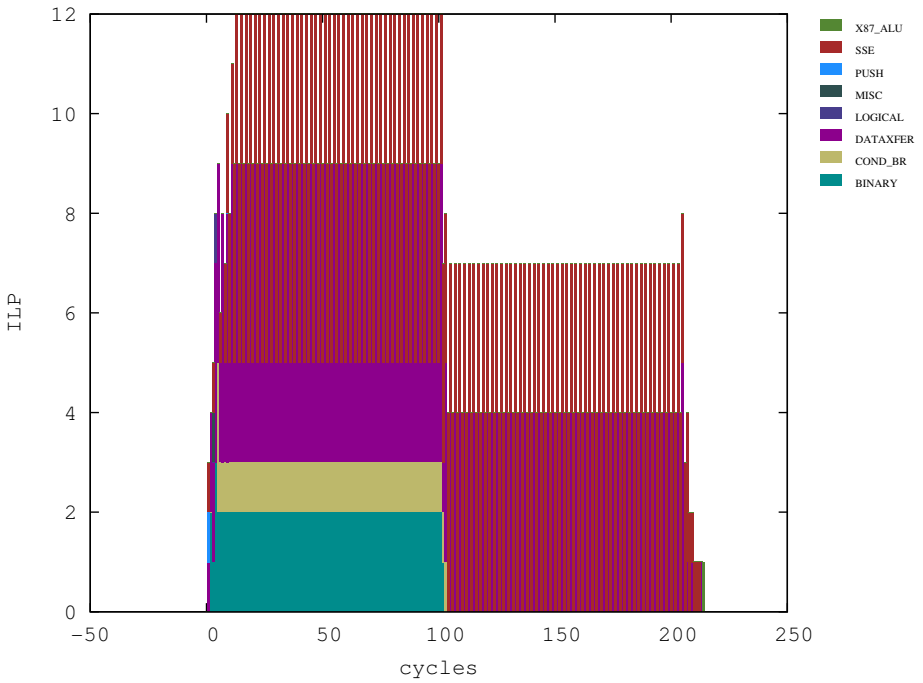

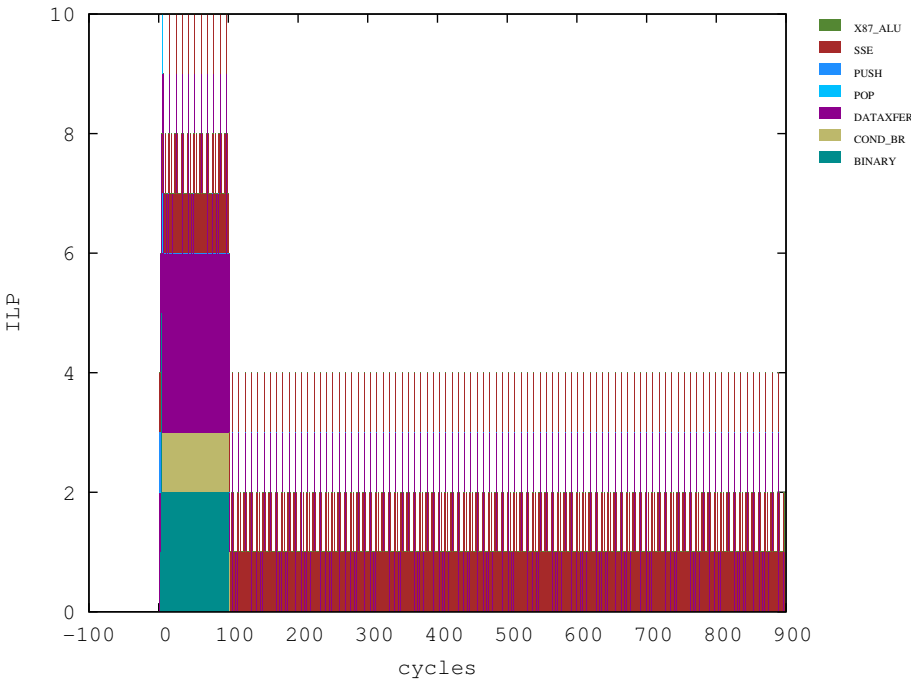

Visualisation of the instruction dependence graph

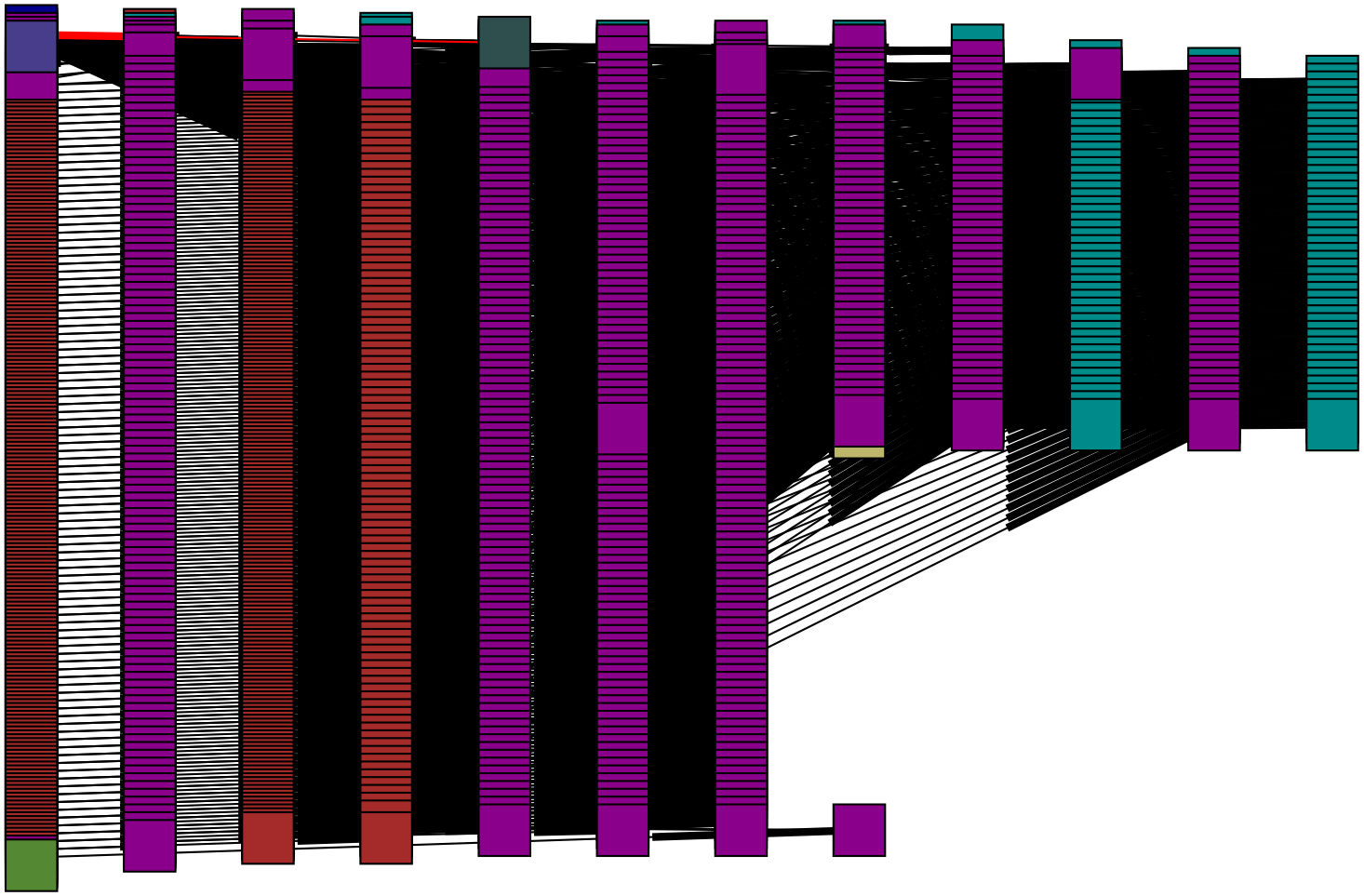

Instruction dependence graph to compare two algorithms

- New FastAccSum is announced to be faster than AccSum:
- $3n$ vs. $4n$ flop ($\times m$ outer iterations) [SISC,2009]

SIEGFRIED M. RUMP

TABLE 6.1
Ratio of computing times t(`AccSum`)/t(`FastAccSum`).

cond \ n	100	300	1000	3000	10,000
10^6	1.09	1.18	1.30	1.35	1.33
10^{16}	1.22	1.22	1.29	1.30	1.88
10^{32}	1.33	1.27	1.45	1.25	1.38
10^{48}	1.35	1.43	1.38	1.33	1.47
10^{60}	1.25	1.33	1.29	1.27	1.40

Instruction dependence graph to compare two algorithms

- New FastAccSum is announced to be faster than AccSum:
- $3n$ vs. $4n$ flop ($\times m$ outer iterations) [SISC,2009]

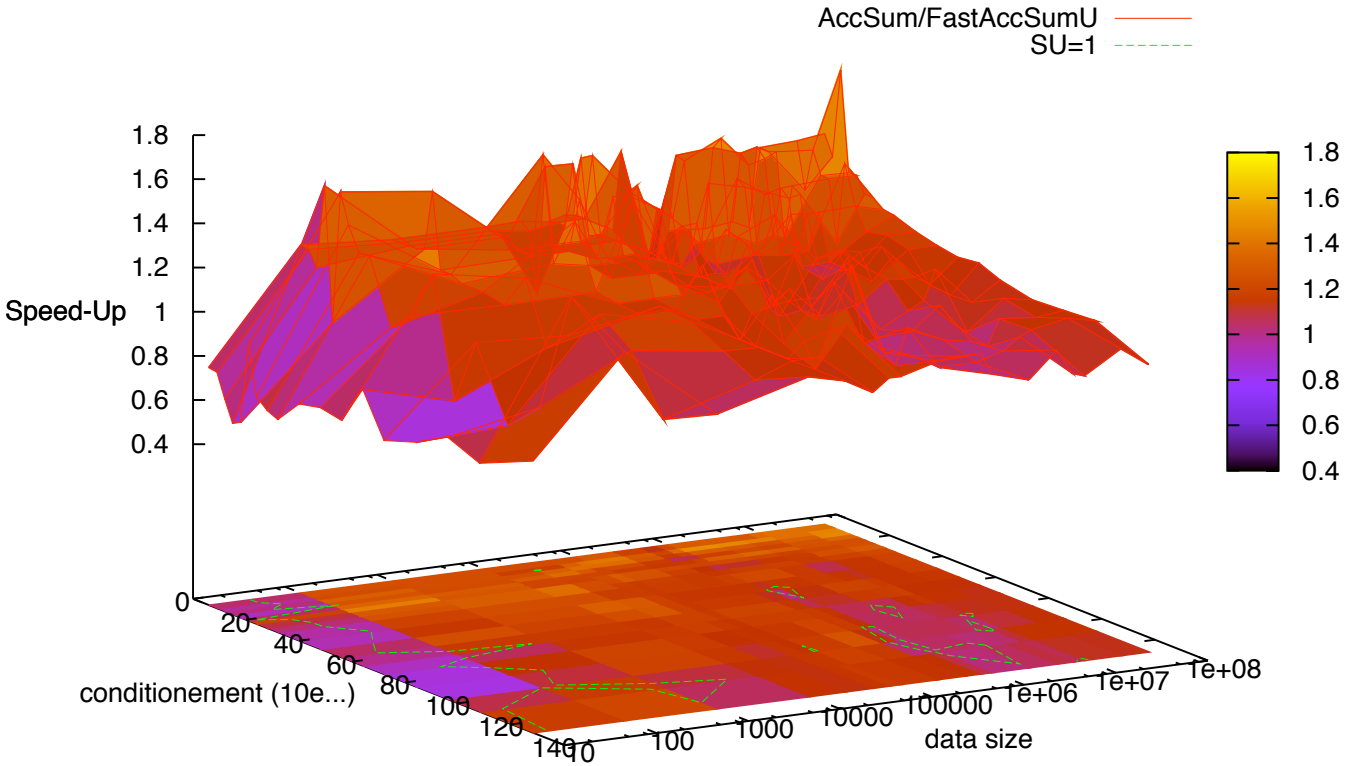

Instruction dependence graph to compare two algorithms

- New FastAccSum is announced to be faster than AccSum:
- $3n$ vs. $4n$ flop ($\times m$ outer iterations) [SISC,2009]
- but AccSum benefits for more ILP

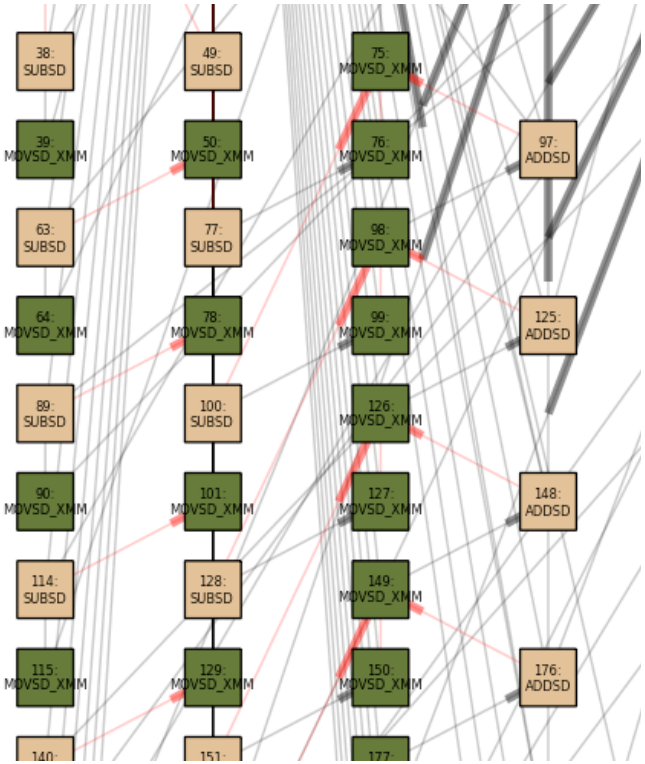

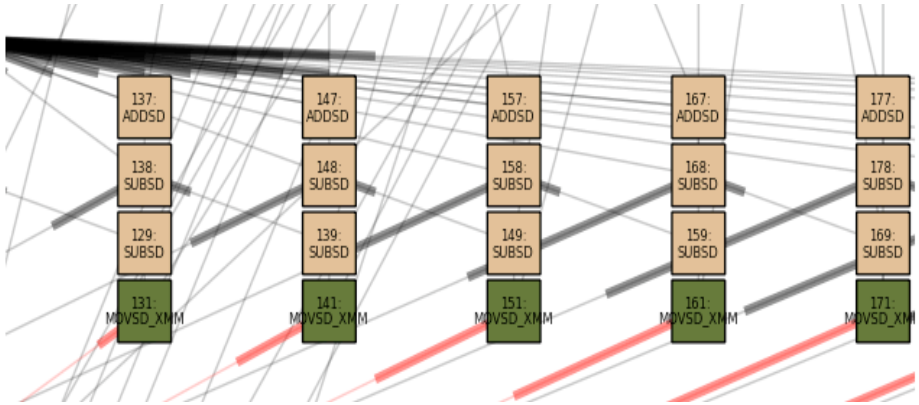

Instruction dependence graph to compare two algorithms

- New FastAccSum is announced to be faster than AccSum:
- $3n$ vs. $4n$ flop ($\times m$ outer iterations) [SISC,2009]
- but AccSum benefits for more ILP
- Let's exploit it!

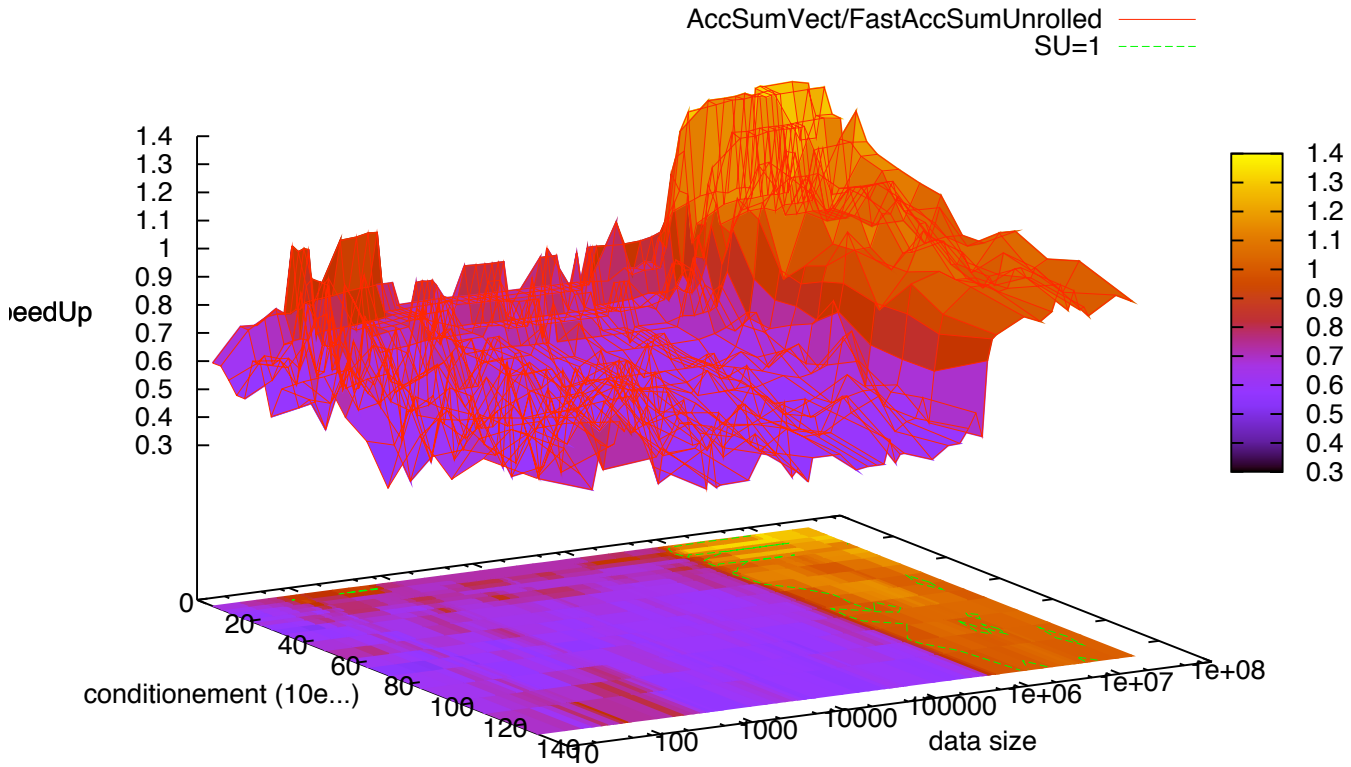

Instruction dependence graph to compare two algorithms

- New FastAccSum is announced to be faster than AccSum:

- S.M. Rump is right!

6. Timing. In this section we briefly report on some timings. We do this with great hesitation: Measuring the computing time of summation algorithms in a high-level language on today's architectures is more of a hazard than scientific research. The results are hardly predictable and often do not reflect the actual performance.

This is the end

Conclusions

PerPI: a software platform to analyze and visualise ILP

- Useful: a detailed picture of the intrinsic behavior of the algorithm
- Reliable: reproducibility both in time and location
- Realistic: correlation with measured ones
- Exploratory tool: gives us the taste of the behavior of our algorithms within "tomorrow" processors
- Optimisation tool: analyse the effect of some hardware constraints

Cons . . . at the current state

- Work in progress
- Not abstract enough: instruction set dependence
- Assembler program or high level programming language?
  IPC vs. FloPC ?

Current working list

- Improving the post-processing visualisation
- Make PerPI available on-line and usable as black-box

The key to performance is to understand the algorithm and the architecture interaction.

Fred Gustavson, Para 2010, last Monday.

Bo Kågström, Para 2010, last Tuesday.